kalt

Member of Advaton

CHEESE BAR

Boost your profit with ultra long cheese loaves

An increasing number of people appreciate pre-packaged sliced cheese. Sliced cheese is gaining significance both in households and the gastronomy sector.

Producers are realizing that producing cheese in long bars is more efficient and allows for a more uniform product compared to producing cheese in Euroblocks and then slicing it.

In the cassette press developed by Kalt, all production steps from filling to demolding are combined in one machine. This achieves the highest level of work efficiency and hygiene possible.

VALUE ADD FOR YOU

The cheese is produced in long bars, resulting in the advantages of homogeneous salt distribution and fewer trimmings

Fewer trimmings mean less loss and more profit. The slicer operates more efficiently

Made by the cassette press, 5-in-1 Solution. Space efficient and hygienic on the highest level

↳ The cheese has just been filled and is now pressed

INNOVATION
THE 5 in 1 PRESS

The 5-in-one- solution allows automatic filling, pressing, acidification, and demoulding of the cheese bars into the brine bath, as well as automatic CIP after the production

This hygienic and efficient solution will be assembled and tested in-house to provide an efficient start-up at your production site

One (1) Person is enough to overview the vat and the press

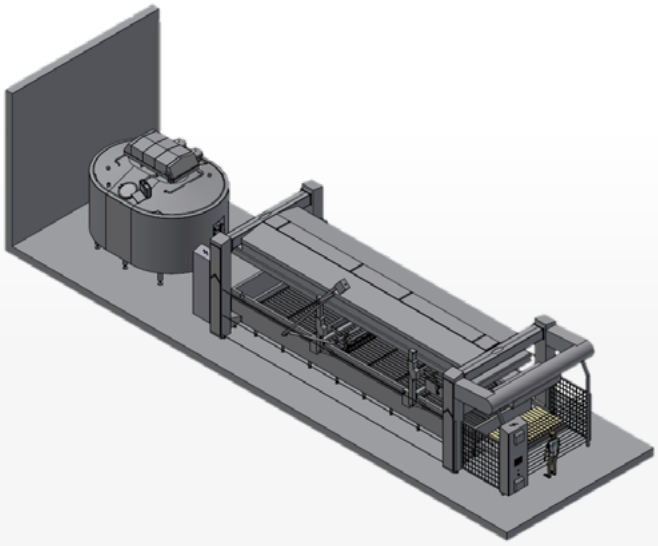

↳ Overview of the 5 in one solution (Filling, pressing, acidification, demolding, automatic CIP cleaning)

SOLUTION
PACKAGES

For an **industrial production**, we will install our invincible team of cheese vat and the cassette press to a production up to 10 batches per day. Each batch fits in one cassette press. The costumer decides how many vats and presses are required, depended on the recipe.

For the long loaves, three different sizes are possible. 10'000 / 20'000 / 30'000 Litres per batch. Footprint for these configurations are 120 / 152 / 190 m2.

A full production of long cheese loaves on Youtube https://www.youtube.com/@kalt-ag

↳ Automatic demolding of the loafs after pressing and acidification

kalt

Member of Advaton

Kalt Cheese Technology
Letziwiesstrasse 8
9604 Lütisburg
Switzerland

+41 71 932 53 53
www.kalt-ag.ch
info@kalt-ag.ch